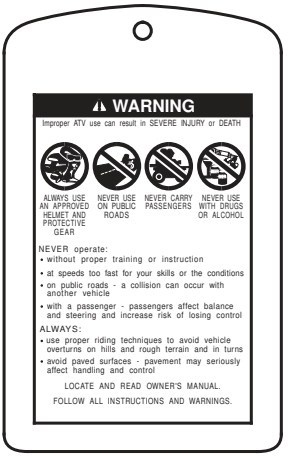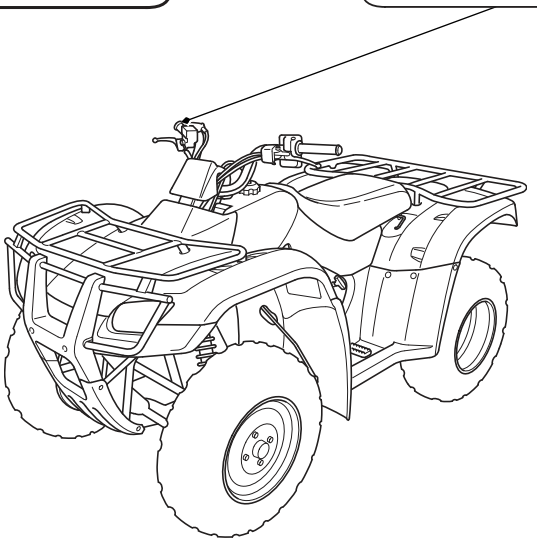# Safety Labels