SPARK PLUGS

(Refer to the maintenance precautions on page 61.)

1. Remove the parts in sequence, according to the order in the following illustration (Left side shown; right side similar).

Installation note:

When installing, the sequence should be: 4, 8, 7, 6, 5, 3, 2, 1.

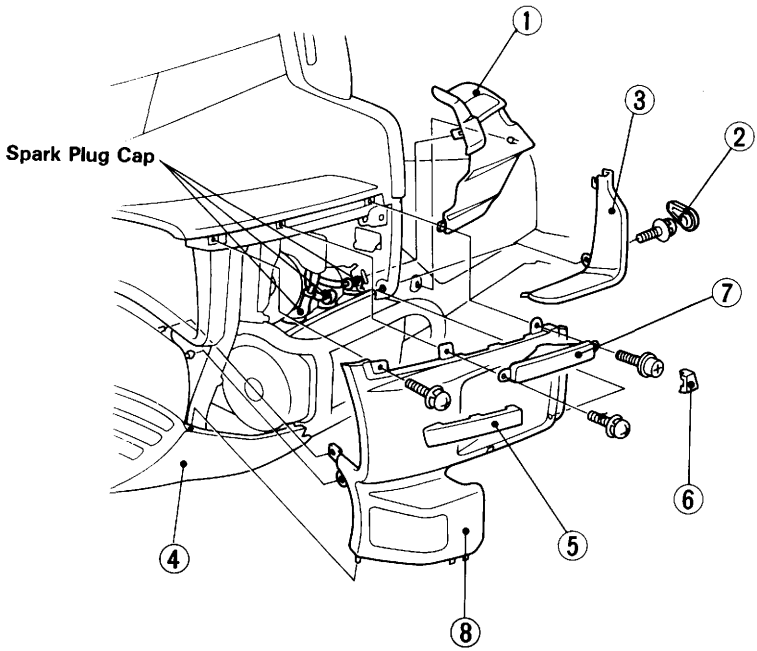

Recommended plugs:

Standard: DPR7EA-9 (NGK), X22EPR-U9 (ND)

For cold climate: (Below 5°C/41°F)

DPR6EA-9 (NGK), X20EPR-U9 (ND)

For extended high speed riding:

DPR8EA-9 (NGK), X24EPR-U9 (ND)

2. Disconnect the spark plug caps from the spark plugs.
3. Clean any dirt from around the spark plug bases. Remove the spark plugs using the plug wrench furnished in the tool kit.